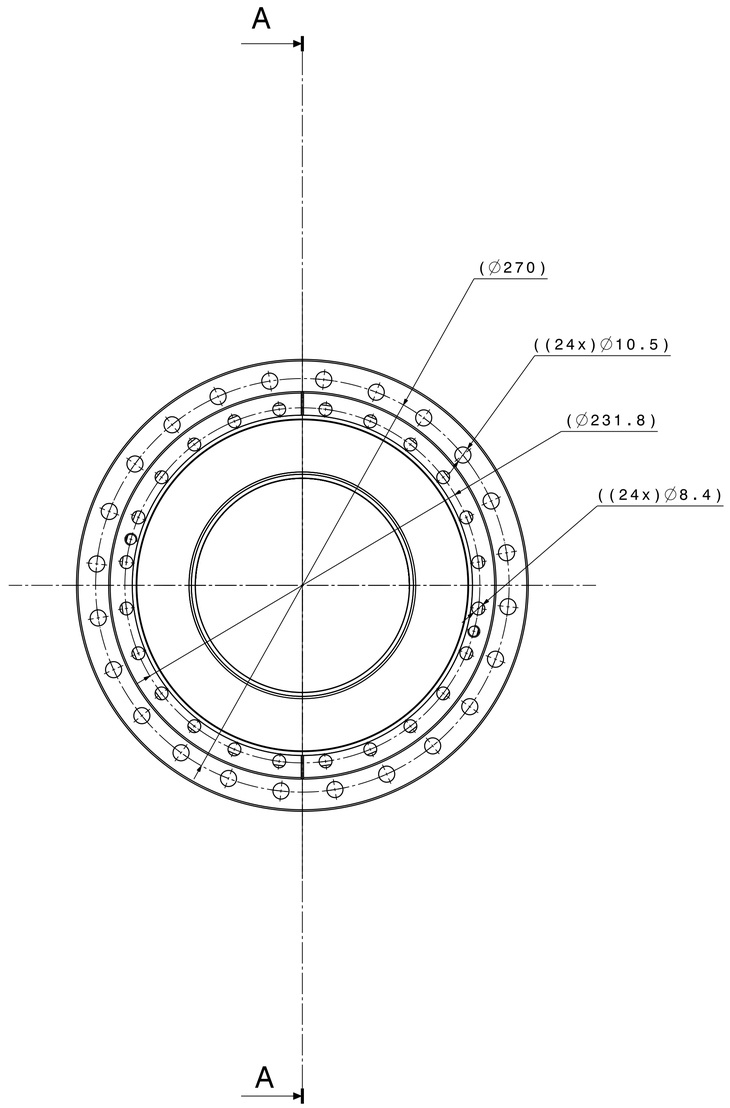

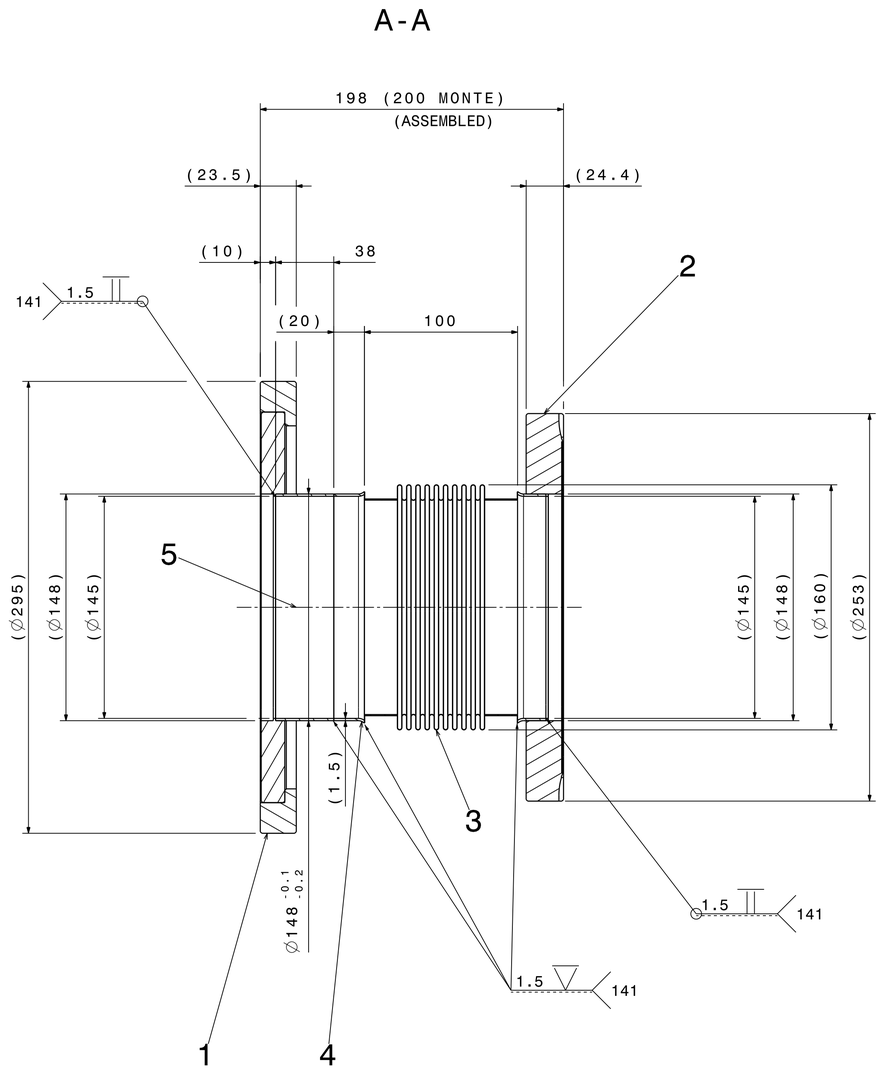

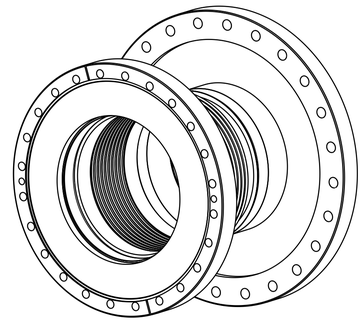

Approximative mass : 14 kg
Masse approximative

Cutting of the material : Ra 3.2
Decoupes des matieres

Cleaning / Nettoyage
According procedure / Suivant procedures de
L. Ferreira, CERN Reports : Procedure Qualite 867.11, 867.15, 876.16 (2003)

Vacuum firing / Traitement Thermique
600°C for 24H / 600°C pendant 24H

NEG coating / Depot NEG
Coating with 2 µm Ti-Zr-V / Dépôt de 2 µm de Ti-Zr-V

Information
Inscribe drawing number on shades area
with an electrical pen
Inscrire le numero de detail sur une zone predefini
avec un stylo electrique

TOLERANCES SELON NORMES ISO	Tolerances geometriques, lineaires et angulaires	ISO 2768-mK-E	
	Aretes de forme non definies	ISO 13715 L 0.3 L 0.3	

Ra 3.2 ( )

QUANT.	DESCRIPTION	POS	MAT.	OBSERVATIONS	REF.CERN
1	SHEET TH. 1.5mm TOLE EP. 1.5mm	5	ST. STEEL 316LN	Ø148/Ø145 LENGTH 42 Ø148/Ø145 LONG. 42	44.59.32 015.3
2	TRANSITION PART Ø151/Ø148 PIECE DE TRANSITION Ø151/Ø148	4	ST. STEEL AC. INOX	E43.1018 DET.13	
1	BELLOWS Ø160/Ø140 LENGTH 100 SOUFFLET Ø160/Ø140 LONG. 100	3	ST. STEEL AC. INOX	CALORSTAT SH.28.01691	
1	UHV FIXED FLANGE Ø253/Ø148 BRIDE UHV FIXE Ø253/Ø148	2	ST. STEEL AC. INOX	STDVFUHV0059	
1	UHV ROTATIVE FLANGE Ø295/Ø148 BRIDE UHV ROTATIVE Ø295/Ø148	1	ST. STEEL AC. INOX	E43.1031	
	ENS/ASS		S.ENS/S.ASS		

LEI Vacuum Chamber for Transition Circular shape 145/148 (Variant E)

VACUUM CHAMBER
ASSEMBLY
CHAMBRE A VIDE
ENSEMBLE

ECHELLE / SCALE 1:2

DES/DRA.	ACROTECNA	2006-06-09
CONTROLLED		
RELEASED		
APPROVED		

LEI\VCTCEO\LEIVCTCE0001
REMPLACE/REPLACES

NON VALABLE POUR EXECUTION
NOT VALID FOR EXECUTION

QAC - | LEIVCTCE0001 | SIZE 1 | IND.

This drawing represents a part (or a component) of the vacuum system for LEIR with will operate at 10-10 Pa (10-12Torr).All welds must be made using the specified technics with 100% penetration.Welds and all other surfaces must not be finished by grinding or any other mechanical abrasion.Any part (or component) of the vacuum system showing a room temperature leak rate (localized or global),when measured with a calibrated UHV leak detector, in excess of 1x10-11 Pa m3 s-1 (7.5x10-11 Torr ls-1) will be considered as unacceptable.

Ce dessin represente une partie (ou composant) du systeme a vide LEIR qui fonctionnera a 10-10 Pa (10-12 Torr). Toutes les soudures seront realisees selon le procede specifique avec penetration de 100%.Ces soudures ne doivent etre ni meulees ni abrasees. Toute partie (ou composant) du systeme a vide ayant un taux de fuite (local ou global), qui est mesure a l'aide d'un detecteur de fuite UHV, superieur a 1x10-11 Pa m3 s-1 (7.5x10-11 Torr ls-1) sera considere comme inacceptable.

DESSIN, RUGOSITE, TOLERANCES SELON NORMES ISO
DRAWING, RUGOSITY, TOLERANCES ACCORDING TO ISO STANDARDS
PROJECTION

ORGANISATION EUROPEENNE POUR LA RECHERCHE NUCLEAIRE
EUROPEAN ORGANIZATION FOR NUCLEAR RESEARCH
GENEVE

Ce dessin ne peut etre utilise a des fins commerciales sans autorisation ecrite
This drawing may not be used for commercial purposes without written authorisation