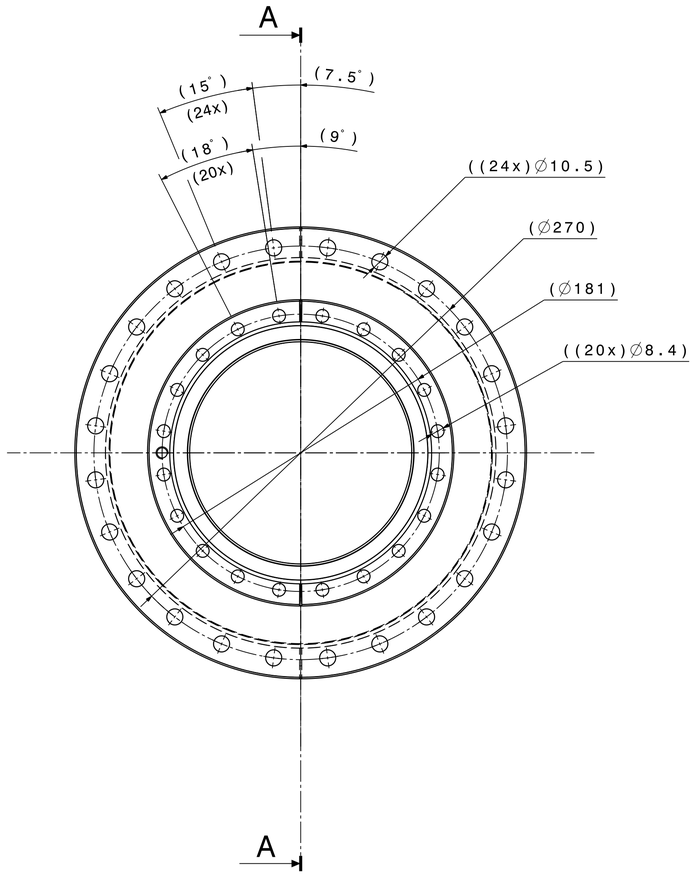

A-A

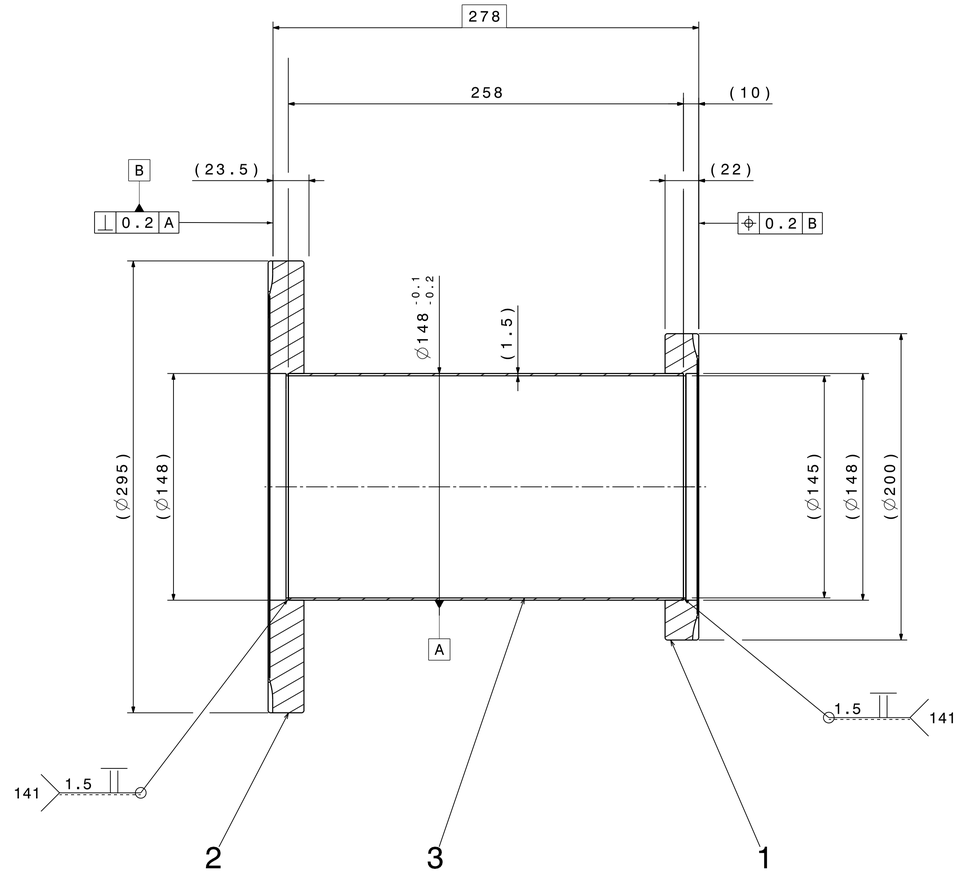

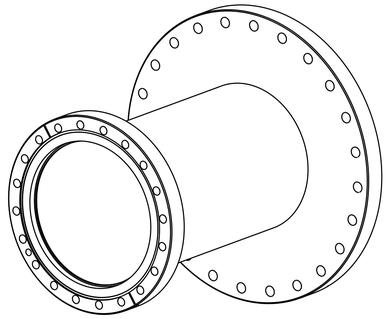

Approximative mass : 12.5 kg
Masse approximative

Cutting of the material : Ra 3.2
Decoupes des matieres

Cleaning / Nettoyage
According procedure / Suivant procedures de
L. Ferreira, CERN Reports : Procedure Qualite 867.11, 867.15, 876.16 (2003)

Vacuum firing / Traitement Thermique
600°C for 24H / 600°C pendant 24H

NEG coating / Depot NEG
Coating with 2 μm Ti-Zr-V / Dépôt de 2 μm de Ti-Zr-V

Information
Inscribe drawing number on shades area
with an electrical pen
Inscrire le numero de detail sur une zone predefini
avec un stylo electrique

TOLERANCES GENERALES "MOYENNE"	Tolerances geometriques, lineaires et angulaires	ISO 2768-mK-E
	Aretes de forme non definies	ISO 13715 L-0.3 L-0.3

Ra 3.2 ( )

QUANT.	DESCRIPTION	POS	MAT.	OBSERVATIONS	REF.CERN
1	SHEET TH. 1.5mm	3	ST. STEEL	Ø148/Ø145 LENGTH 262	44.59.32
	TOLE EP. 1.5mm		316LN	Ø148/Ø145 LONG. 262	015.3
1	FIXED UHV FLANGE 295 - FOR TUBE 145/148	2	ST. STEEL	STDVFUHV0102	
	BRIDE FIXE UHV 295 - POUR TUBE 145/148		AC. INOX		
1	UHV FIXED FLANGE Ø200/Ø148	1	ST. STEEL	E43.1033 DET.5	
	BRIDE UHV FIXE Ø200/Ø148		AC. INOX		
	ENS/ASS		S.ENS/S.ASS		

LEI Vacuum Chamber for Transition Circular shape 145/148 (Variant A)

VACUUM CHAMBER
ASSEMBLY
CHAMBRE A VIDE
ENSEMBLE

ECHELLE SCALE	DES/DRA.	ACROTECNA	2006-07-26
1:2	CONTROLLED		
	RELEASED		
	APPROVED		
	LEI\VCTCAO\LEIVCTCA0001		
	REMPLACE/REPLACES		

NON VALABLE POUR EXECUTION
NOT VALID FOR EXECUTION

QAC: -

LEIVCTCA0001 | SIZE: 1 | IND.:

This drawing represents a part (or a component) of the vacuum system for LEIR with will operate at 10-10 Pa (10-12Torr).All welds must be made using the specified technics with 100% penetration.Welds and all other surfaces must not be finished by grinding or any other mechanical abrasion.Any part (or component) of the vacuum system showing a room temperature leak rate (localized or global),when measured with a calibrated UHV leak detector, in excess of 1x10-11 Pa m3 s-1 (7.5x10-11 Torr ls-1) will be considered as unacceptable.

Ce dessin represente une partie (ou composant) du systeme a vide LEIR qui fonctionnera a 10-10 Pa (10-12 Torr). Toutes les soudures seront realisees selon le procede specifique avec penetration de 100%.Ces soudures ne doivent etre ni meulees ni abrasees. Toute partie (ou composant) du systeme a vide ayant un taux de fuite (local ou global), qui est mesure a l'aide d'un detecteur de fuite UHV, superieur a 1x10-11 Pa m3 s-1 (7.5x10-11 Torr ls-1) sera considere comme inacceptable.

DESSIN, RUGOSITE, TOLERANCES SELON NORMES ISO
DRAWING, RUGOSITY, TOLERANCES ACCORDING TO ISO STANDARDS
PRODUCTION
ORGANISATION EUROPEENNE POUR LA RECHERCHE NUCLEAIRE
EUROPEAN ORGANIZATION FOR NUCLEAR RESEARCH
GENEVE
CERN
Ce dessin ne peut etre utilise a des fins commerciales sans autorisation ecrite
This drawing may not be used for commercial purposes without written authorisation