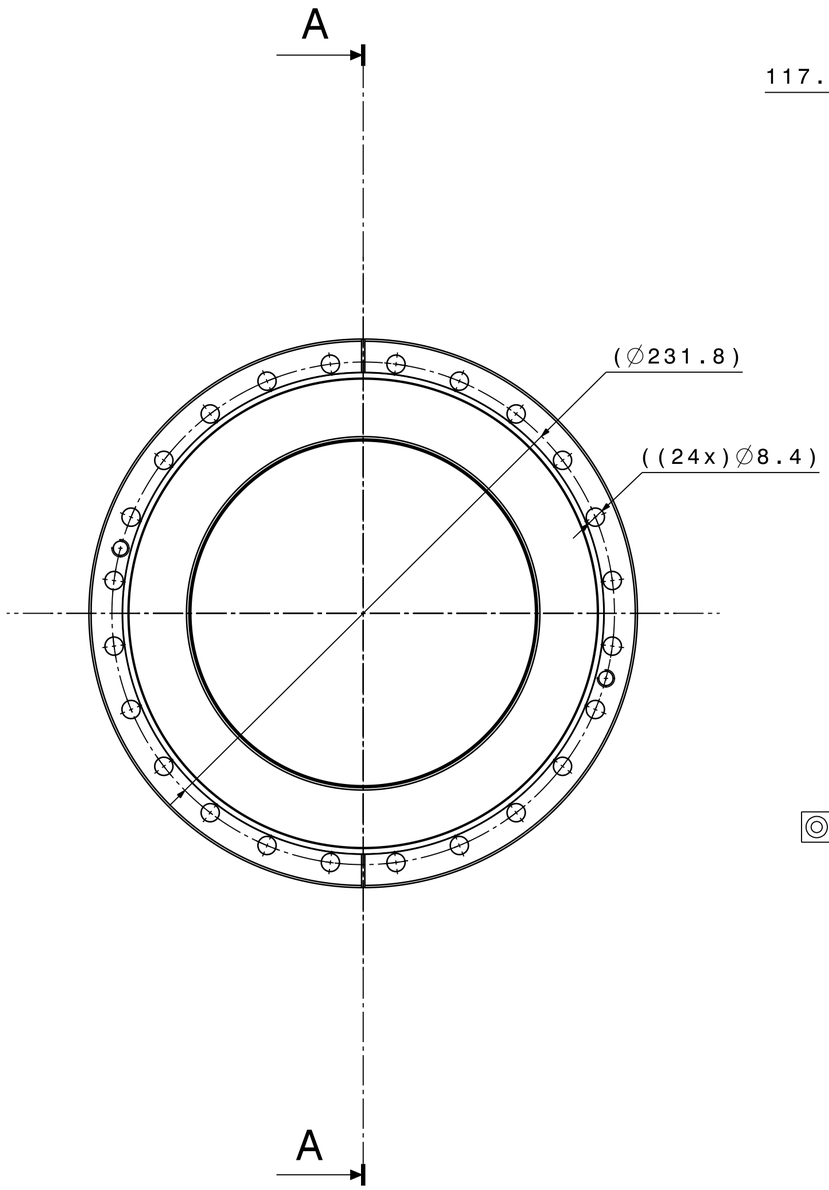

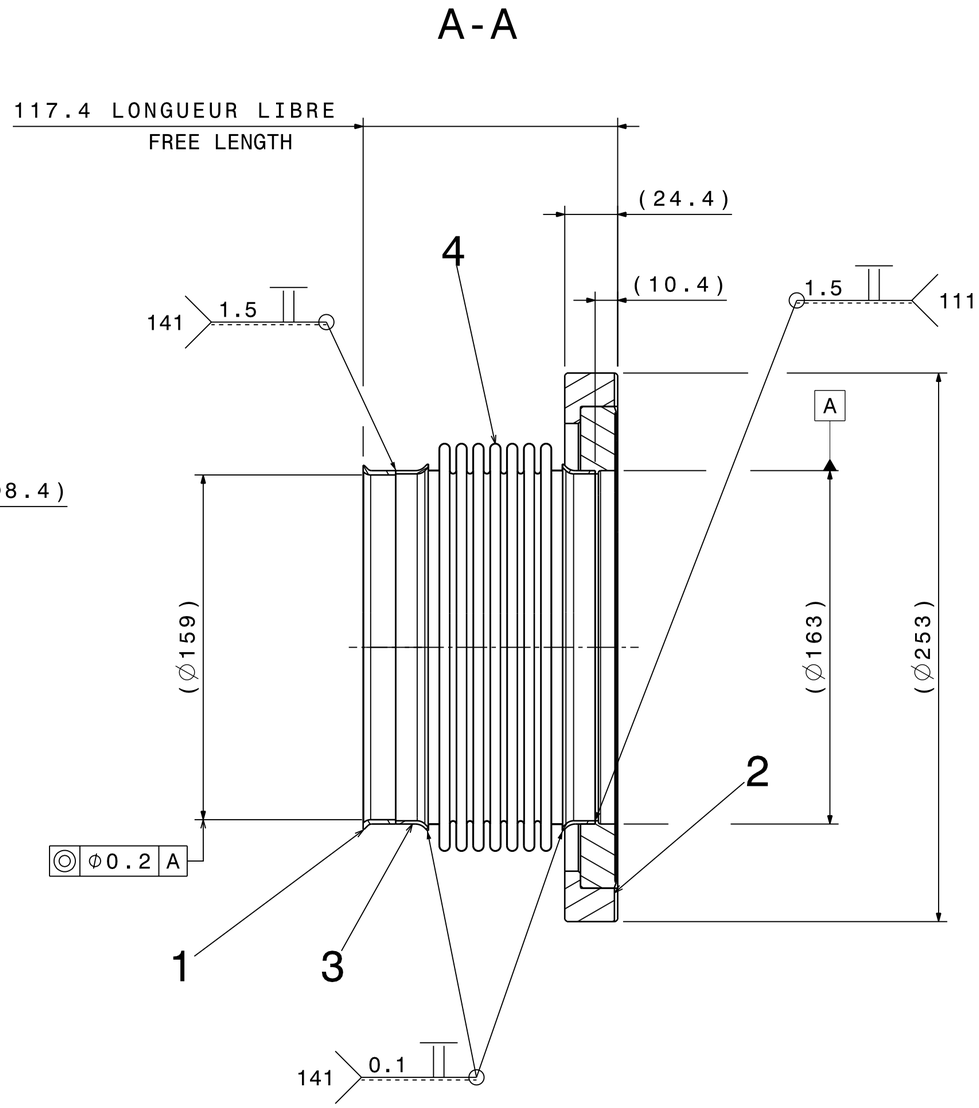

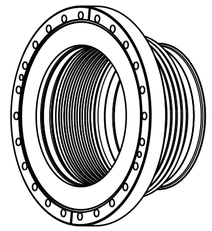

Approximative mass : 5 kg
Masse approximative

Cleaning / Nettoyage
According procedure / Suivant procedures de
L. Ferreira, CERN Reports : Procedure Qualite 867.11,
867.15, 876.16 (2003)

QUANT.	DESCRIPTION	POS	MAT.	OBSERVATIONS	REF.CERN
1	BELLOWS SOUFFLET	4		CALORSTAT SH.28.07594 0	
2	TRANSITION PART Ø163/Ø160 PIECE DE TRANSITION Ø163/Ø160	3		LEIVCPTF0005	
1	ROTATIVE FLANGE Ø253 FOR TUBE Ø163/Ø160 BRIDE ROTATIVE Ø253 OUR TUBE Ø163/Ø160	2		LEIVCPTF0004	
1	TRANSITION PART Ø163/Ø159 PIECE DE TRANSITION Ø163/Ø159	1		LEIVCPTF0002	
	ENS/ASS		S.ENS/S.ASS	LEIVCPTF0001	

This drawing represents a part (or a component) of the vacuum system for LEIR with will operate at 10-10 Pa (10-12Torr).All welds must be made using the specified technics with 100% penetration.Welds and all other surfaces must not be finished by grinding or any other mechanical abrasion.Any part (or component) of the vacuum system showing a room temperature leak rate (localized or global),when measured with a calibrated UHV leak detector, in excess of 1x10-11 Pa m3 s-1 (7.5x10-11 Torr ls-1) will be considered as unacceptable.

Ce dessin represente une partie (ou composant) du systeme a vide LEIR qui fonctionnera a 10-10 Pa (10-12 Torr). Toutes les soudures seront realisees selon le procede specifique avec penetration de 100%.Ces soudures ne doivent etre ni meulees ni abrasees. Toute partie (ou composant) du systeme a vide ayant un taux de fuite (local ou global), qui est mesure a l'aide d'un detecteur de fuite UHV, superieur a 1x10-11 Pa m3 s-1 (7.5x10-11 Torr ls-1) sera considere comme inacceptable.

LEIR Vacuum Chamber Pump Tank Variant F

VACUUM CHAMBER ASSEMBLY
FLANGE/BELLOWS ASSEMBLY
ENSEMBLE CHAMBRE A VIDE
ENSEMBLE BRIDE/SOUFFLET

ECHELLE / SCALE 1:2

DES/DRA.	ACROTECNA	2006-11-23
CONTROLLED		
RELEASED		
APPROVED		

LEI\VCPTF0\LEIVCPTF0003
REMPLACE/REPLACES

NON VALABLE POUR EXECUTION
NOT VALID FOR EXECUTION

QAC -

LEIVCPTF0003

SIZE 2 IND.

ORGANISATION EUROPEENNE POUR LA RECHERCHE NUCLEAIRE
EUROPEAN ORGANIZATION FOR NUCLEAR RESEARCH
GENEVE

DESSIN, RUGOSITE, TOLERANCES SELON NORMES ISO
DRAWING, RUGOSITY, TOLERANCES ACCORDING TO ISO STANDARDS

PROJECTION

Ce dessin ne peut etre utilise a des fins commerciales sans autorisation ecrite
This drawing may not be used for commercial purposes without written autorisation