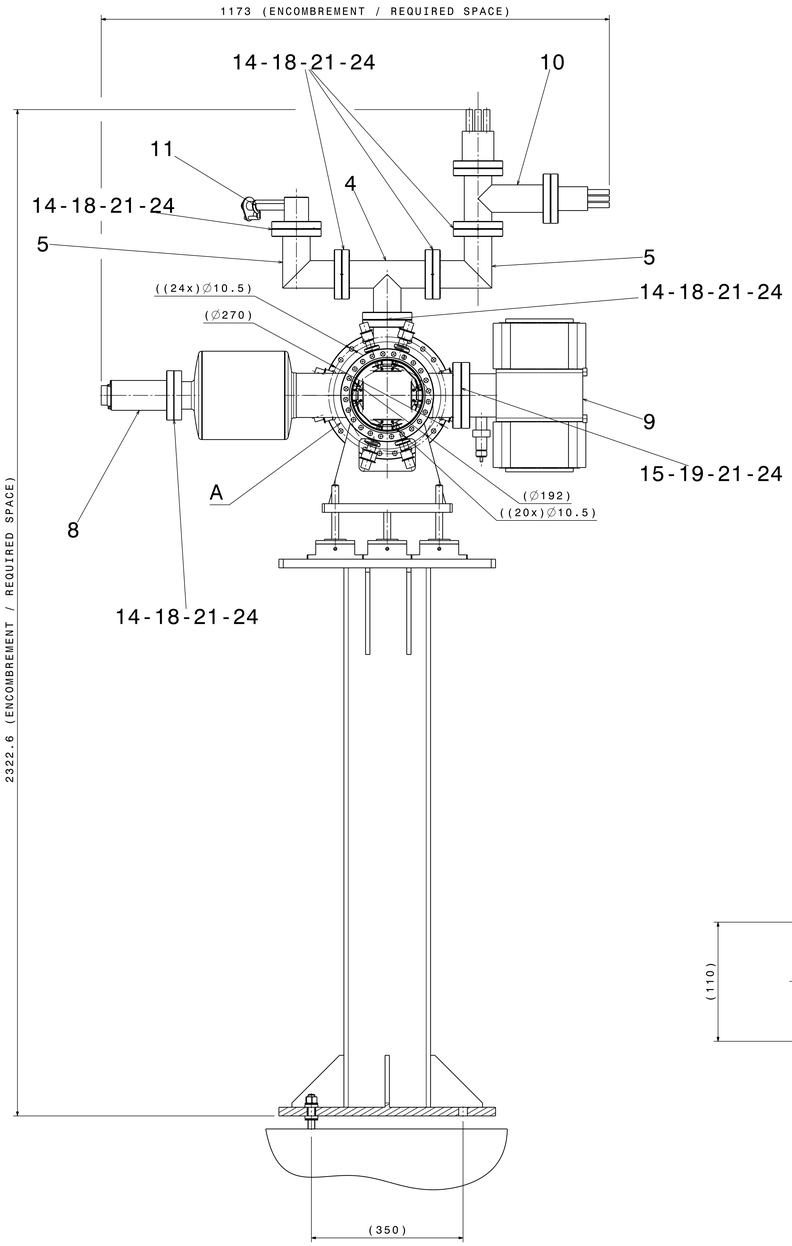

Détail B

Echelle : 1:2
Scale

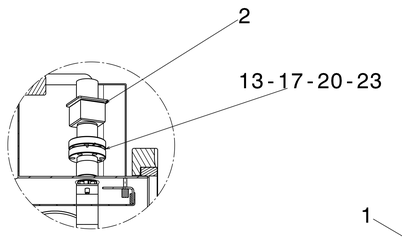

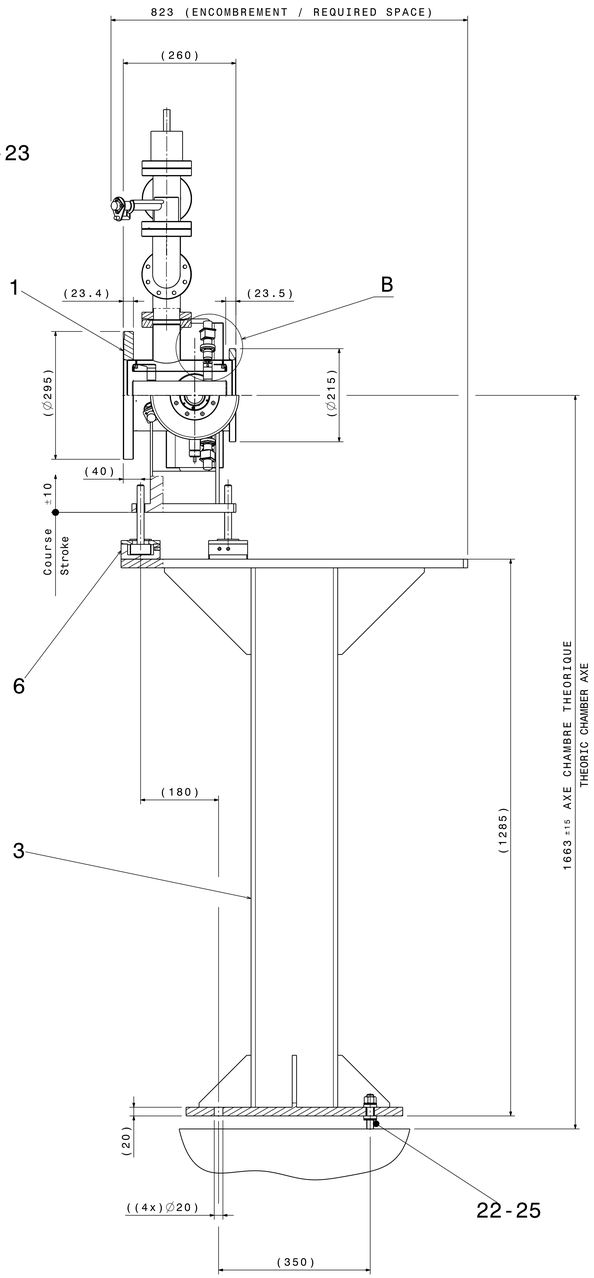

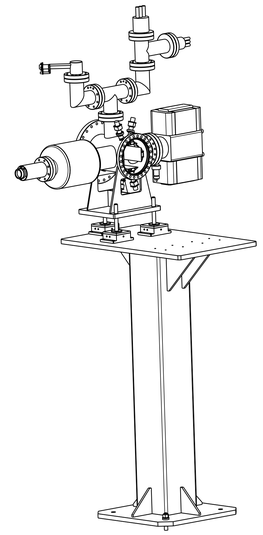

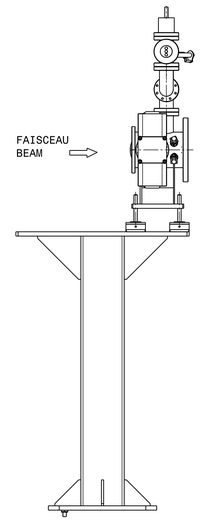

Détail A

Echelle : 1:2
Scale

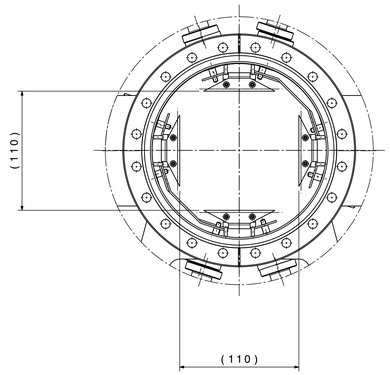

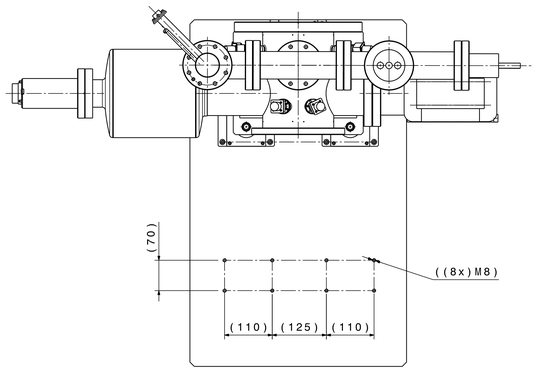

Torque Screw A4-70 for general mechanical assembly Serrage pour du A4-70 a sec (coeff. frottement μ=0.2)									
Thread	M3	M4	M5	M6	M8	M10	M12	M14	M16
Couple de serrage Tightening torque Nm	1.1	2.6	5.1	8.8	21.4	44	74	119	183

QUANT	DESCRIPTION	POS.	MAT.	OBSERVATIONS	REF.CERN
8	SPHERICAL WASHER M16 RONDELLE SPHERIQUE M16	25	HARD. STEEL ACIER DUR		47.78.12 816.6
128	PLAIN WASHER M8 RONDELLE PLATE M8	24	ST. STEEL A4 AC. INOX A4		47.78.15 116.5
96	PLAIN WASHER M4 RONDELLE PLATE M4	23	ST. STEEL A4 AC. INOX A4		47.78.15 108.5
8	HEXAGONAL NUT M16 ECROU HEXAGONAL M16	22	ST. STEEL AC. INOX		47.43.77 160.4
64	HEXAGON NUT M8 ECROU HEXAGONAL M8	21	ST. STEEL A4 AC. INOX A4		47.43.78 108.4
48	HEXAGONAL NUTS M4 ECROU HEXAGONAL M4	20	ST. STEEL A4 AC. INOX A4		47.43.78 104.8
16	HEXAGONAL HEAD SCREW M8x55 VIS A TETE HEXAGONALE M8x55	19	ST. STEEL A4 AC. INOX A4		47.62.83 122.3
48	HEXAGONAL HEAD SCREW M8x45 VIS A TETE HEXAGONALE M8x45	18	ST. STEEL A4 AC. INOX A4		47.62.83 118.9
48	HEXAGONAL HEAD SCREW M4x20 VIS A TETE HEXAGONALE M4x20	17	ST. STEEL A4 AC. INOX A4		47.62.83 004.8
		16			
1	SEAL METAL FOR UHV FLANGE DN 100 JOINT METAL POUR BRIDE UHV DN100	15	CuOFS 0,1 AG CuOFS 0,1 AG		18.60.55 860.4
6	SEAL METAL FOR UHV FLANGE DN 63 JOINT METAL POUR BRIDE UHV DN 63	14	CuOFS 0,1 AG CuOFS 0,1 AG		18.60.55 855.1
8	SEAL METAL FOR UHV FLANGE DN 16 JOINT METAL. POUR BRIDE UHV DN 16	13	CuOFS 0,1 AG CuOFS 0,1 AG		18.60.55 840.8
		12			
1	IONISATION GAUGE (VGI) JAUGE DE IONISATION (VGI)	11		SVT 305	
1	RESIDUAL GAZ ANALYSER (RGA) ANALYSEUR DE GAZ RESIDUEL (RGA)	10		BALZER QMA125	
1	ION PUMP (VPI60) POMPE IONIQUE 60 l/s (VPI60)	9		VARIAN 911.5034	
1	SUBLIMATION PUMP (VPS) POMPE DE SUBLIMATION (VPS)	8		PS_VMPUMQ001	
		7			
3	BASE OF ADJUSTMENT SOCLE DE REGLAGE	6		E76.1042	
2	VACUUM TUBE 90° TUBE A VIDE 90°	5		CVT.FE.114.64	
1	VACUUM TUBE TUBE A VIDE	4		CVT.FT.114.64R	
1	PILLAR VACUUM CHAMBER PILIER CHAMBRE A VIDE	3		LEIHM___0017	
4	ELECTRODE EQUIPPED ELECTRODE EQUIPEE	2		LEIBPUAA0001	
1	PUMP TANK WITH PICK UP CHAMBRE A VIDE AVEC PIQUAGES	1		LEIVCKSB0001	
	ENS/ASS		S.ENS/S.ASS		

Assembly of kicker magnet - for damping or Q-measurement

KICKER ASSEMBLY KICKER ENSEMBLE

ECHELLE SCALE 1:5 1:2	DES/DRA.	ACROTECNA 2006-09-11
	CONTROLLED	
	RELEASED	
	APPROVED	

LEI\LMKDQ0\LEILMKDQ0002

REMPLACE/REPLACES

NON VALABLE POUR EXECUTION
NOT VALID FOR EXECUTION

GAC - LEILMKDQ0002 SIZE 0 IND.

DESSIN, RUGOSITE, TOLERANCES
DRAWING, RUGOSITY, TOLERANCES
ACCORDING TO ISO STANDARDS

ORGANISATION EUROPEENNE POUR LA RECHERCHE NUCLEAIRE
EUROPEAN ORGANIZATION FOR NUCLEAR RESEARCH
GENEVE

THIS DRAWING MAY NOT BE USED FOR COMMERCIAL PURPOSES WITHOUT WRITTEN AUTHORISATION OF CERN