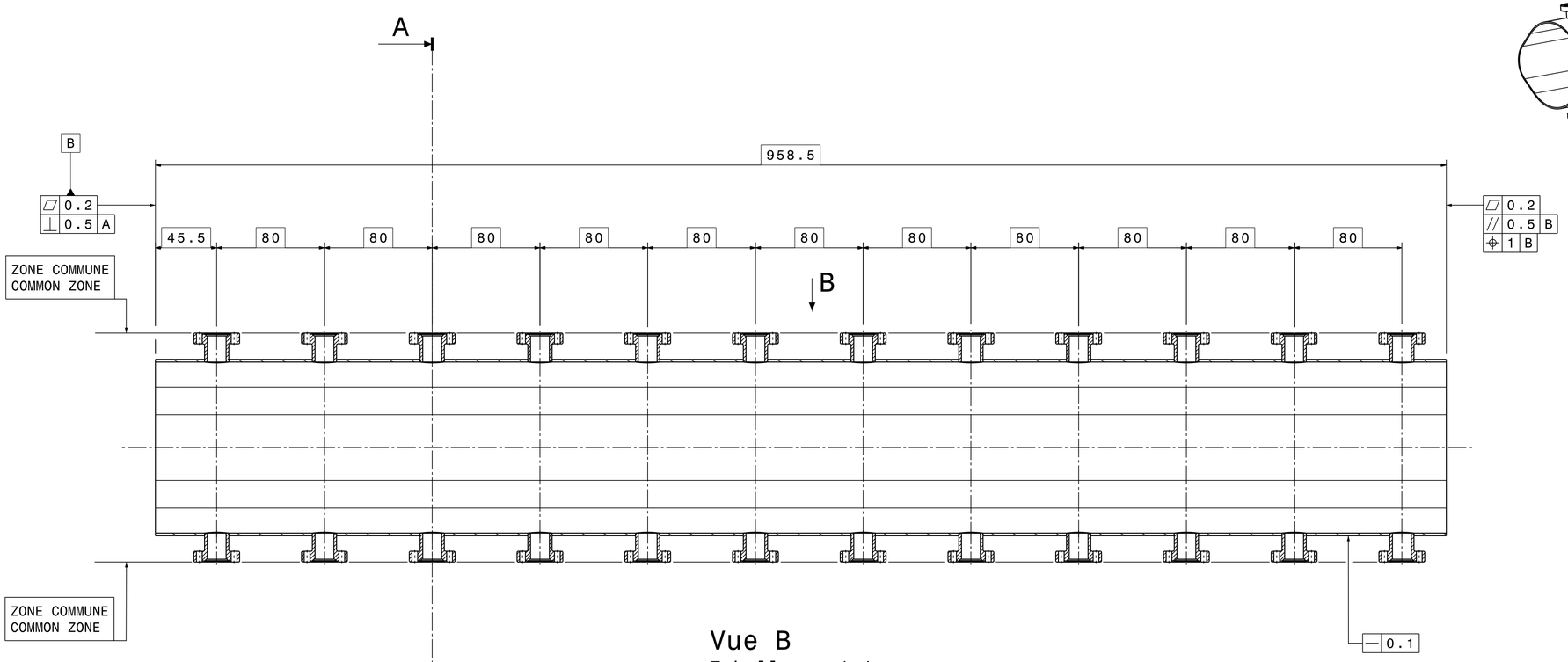

Vue B
Echelle : 1:1
Scale

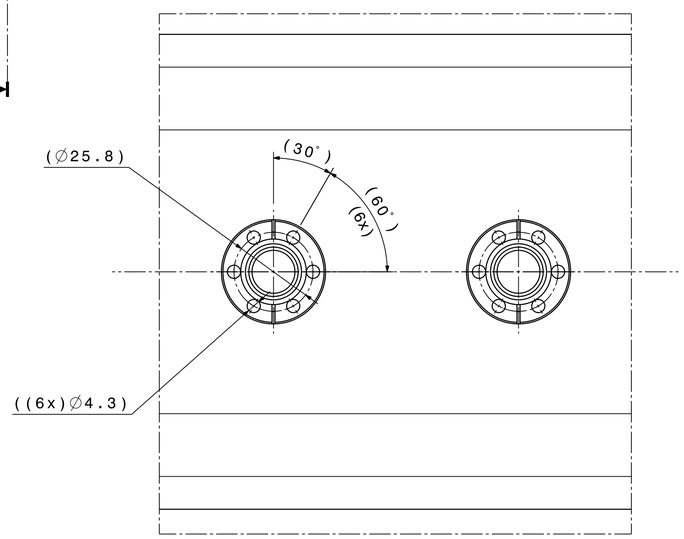

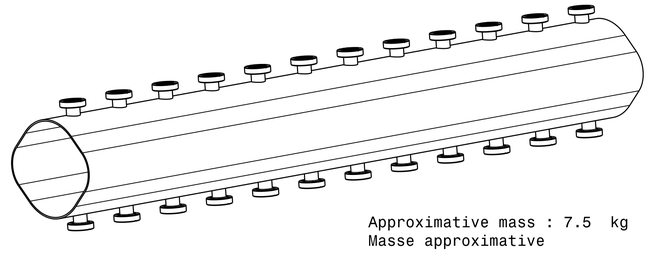

Approximative mass : 7.5 kg
Masse approximative

A-A

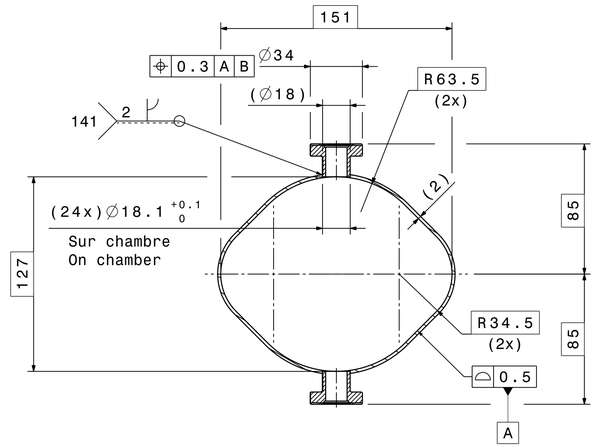

Cutting of the material : Ra 1.6
Decoupes des matieres

Cleaning / Nettoyage
According procedure / Suivant procedures de L. Ferreira, CERN Reports : Procedure Qualite 867.11, 867.15, 876.16 (2003)

Vacuum firing / Traitement Thermique
600°C for 24H / 600°C pendant 24H

NEG coating / Depot NEG
Coating with 2 μm Ti-Zr-V / Dépôt de 2 μm de Ti-Zr-V

TOLERANCES UNLESS OTHERWISE SPECIFIED	Tolerances geometriques, lineaires et angulaires	ISO 2768-mK-E	
	Aretes de forme non definies	ISO 13715 +0.3 −0.3	

Ra 1.6 ( )

QUANT.	DESCRIPTION	POS	MAT.	OBSERVATIONS	REF.CERN
16	FIXED FLANGE CF Ø34 / BRIDE FIXE CF Ø34	2	ST. STEEL AC. INOX	E43.1151.4	
1	SHEET TH. 2mm / TOLE EP. 2mm	1	ST. STEEL 316LN	965x450x2	44.59.32 / 520.1

ENS/ASS LEILMQFB0003 S.ENS/S.ASS LEIVCQLD0001

LEIR Vacuum Chamber for Quadrupoles Lozenge-shaped (Variant D)

VACUUM CHAMBER ASSEMBLY
VACUUM CHAMBER WITH PICK UP
ENSEMBLE CHAMBRE A VIDE
CHAMBRE A VIDE AVEC PIQUAGES

ECHELLE SCALE 1:2 1:1

DES/DRA.	ACROTECNA	2006-07-10
CONTROLLED		
RELEASED		
APPROVED		

LEI\VCQLDO\LEIVCQLDO0002
REMPLACE/REPLACES

NON VALABLE POUR EXECUTION
NOT VALID FOR EXECUTION

QAC - LEIVCQLD0002 SIZE 1 IND.

This drawing represents a part (or a component) of the vacuum system for LEIR with will operate at 10-10 Pa (10-12Torr).All welds must be made using the specified technics with 100% penetration.Welds and all other surfaces must not be finished by grinding or any other mechanical abrasion.Any part (or component) of the vacuum system showing a room temperature leak rate (localized or global),when measured with a calibrated UHV leak detector, in excess of 1x10-11 Pa m3 s-1 (7.5x10-11 Torr ls-1) will be considered as unacceptable.

Ce dessin represente une partie (ou composant) du systeme a vide LEIR qui fonctionnera a 10-10 Pa (10-12 Torr). Toutes les soudures seront realisees selon le procede specifique avec penetration de 100%.Ces soudures ne doivent etre ni meulees ni abrasees. Toute partie (ou composant) du systeme a vide ayant un taux de fuite (local ou global), qui est mesure a l'aide d'un detecteur de fuite UHV, superieur a 1x10-11 Pa m3 s-1 (7.5x10-11 Torr ls-1) sera considere comme inacceptable.

DESSIN, RUGOSITE, TOLERANCES SELON NORMES ISO
DRAWING, RUGOSITY, TOLERANCES ACCORDING TO ISO STANDARDS

PROJECTION

ORGANISATION EUROPEENNE POUR LA RECHERCHE NUCLEAIRE
EUROPEAN ORGANIZATION FOR NUCLEAR RESEARCH
GENEVE

CE DESSIN ne peut etre utilise des fins commerciales sans autorisation ecrite
This drawing may not be used for commercial purposes without written authorisation