Détail C

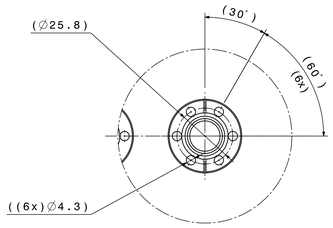

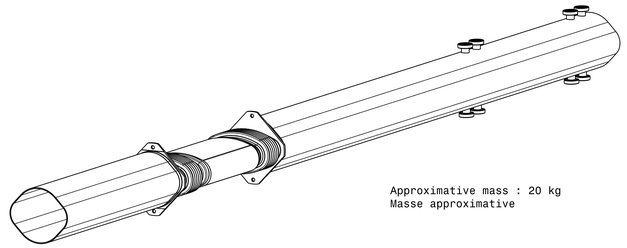

Approximative mass : 20 kg
Masse approximative

B-B

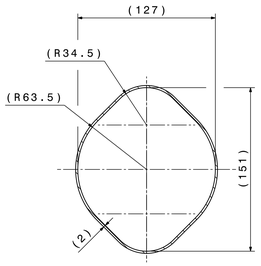

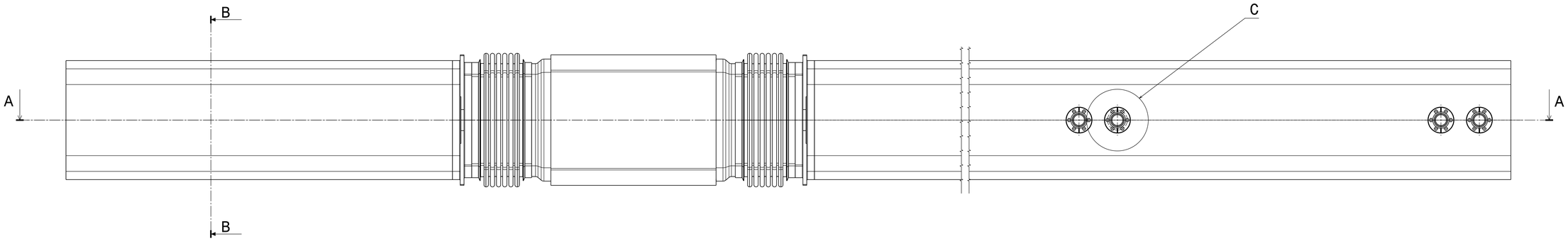

A-A

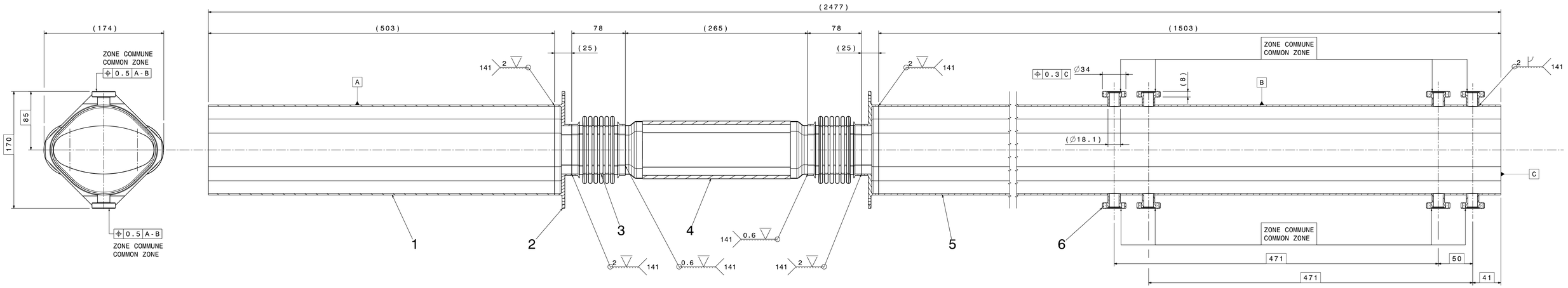

Cleaning / Nettoyage
According procedure / Suivant procedures de
L. Ferreira, CERN Reports : Procedure Qualite 867.11, 867.15, 876.16 (2003)

Vacuum firing / Traitement Thermique
600°C for 24H / 600°C pendant 24H

NEG coating / Depot NEG
Coating with 2 µm Ti-Zr-V / Dépôt de 2 µm de Ti-Zr-V

Note / Nota :
Protect the ceramic during the removal of the NEG
Potéger la céramique lors de la dépose du NEG

Information
Inscribe drawing number on shades area
with an electrical pen
Inscrire le numero de detail sur une zone predefini
avec un stylo electrique

GENERAL TOLERANCES / TOLERANCES GENERALES	Tolerances geometriques, lineaires et angulaires	ISO 2768-mK-E
	Aretes de forme non definies	ISO 13715 $^{+0.3}_{-0.3}$ $^{+0.3}_{-0.3}$

Ce dessin represente une partie (ou composant) du systeme a vide LEIR qui fonctionnera a 10-10 Pa (10-12 Torr). Toutes les soudures seront realisees selon le procede specifique avec penetration de 100%.Ces soudures ne doivent etre ni meulees ni abrasees. Toute partie (ou composant) du systeme a vide ayant un taux de fuite (local ou global), qui est mesure a l'aide d'un detecteur de fuite UHV, superieur a 1x10-11 Pa m3 s-1 (7.5x10-11 Torr ls-1) sera considere comme inacceptable.

This drawing represents a part (or a component) of the vacuum system for LEIR with will operate at 10-10 Pa (10-12Torr).All welds must be made using the specified technics with 100% penetration.Welds and all other surfaces must not be finished by grinding or any other mechanical abrasion.Any part (or component) of the vacuum system showing a room temperature leak rate (localized or global),when measured with a calibrated UHV leak detector, in excess of 1x10-11 Pa m3 s-1 (7.5x10-11 Torr ls-1) will be considered as unacceptable.

QUANT.	DESCRIPTION	POS	MAT.	OBSERVATIONS	REF.CERN
8	FIXED FLANGE Ø34CF BRIDE FIXE Ø34CF	6	ST. STEEL 316LN	E43.1151	
1	VACUUM CHAMBER WITH PICK UP CHAMBRE A VIDE AVEC PIQUAGES	5	ST. STEEL 316LN	LEIVCQLB0003	
1	CERAMIC CERAMIQUE	4		E43.1504	
4	ELLIPTIC BELLOWS SOUFFLET ELLIPTIQUE	3	ST. STEEL 316L/316LN	PSP.00394.2	
2	TRANSITION PART PIECE DE TRANSITION	2	ST. STEEL 316LN	LEIVCQLB0005	
1	SMALL VACUUM CHAMBER PETITE CHAMBRE A VIDE	1	ST. STEEL 316LN	LEIVCQLB0004	

ENS/ASS LEILMQFB0006 S.ENS/S.ASS LEIVCQLB0001

LEIR Vacuum Chamber for Quadrupolar Lorentz-shaped (Varian) BL

VACUUM CHAMBER ASSEMBLY
VACUUM CHAMBER
ENSEMBLE CHAMBRE A VIDE
CHAMBRE A VIDE

DES/DRN.	ACROTECNA	2006-07-07
CONTROLLED		
RELEASED		
APPROVED		

ECHELLE / SCALE 1:2

LEI\VCQLB0\LEIVCQLB0002

REMPLACE/REPLACES

NON VALABLE POUR EXECUTION
NOT VALID FOR EXECUTION

QAC - LEIVCQLB0002 SIZE 0 IND.

DESSIN, RUGOSITE, TOLERANCES GENERALES ACCORDING TO ISO STANDARDS
DRAWING, ROUGHNESS, TOLERANCES ACCORDING TO ISO STANDARDS

REDUCTION

ORGANISATION EUROPEENNE POUR LA RECHERCHE NUCLEAIRE
EUROPEAN ORGANIZATION FOR NUCLEAR RESEARCH
GENEVE

CERN
CH-1211 GENEVE 23 - SUISSE
CERN
CH-1211 GENEVA 23 - SWITZERLAND
Ce document ne peut être reproduit ni communiqué sans autorisation écrite préalable
This document may not be copied or disclosed without written permission