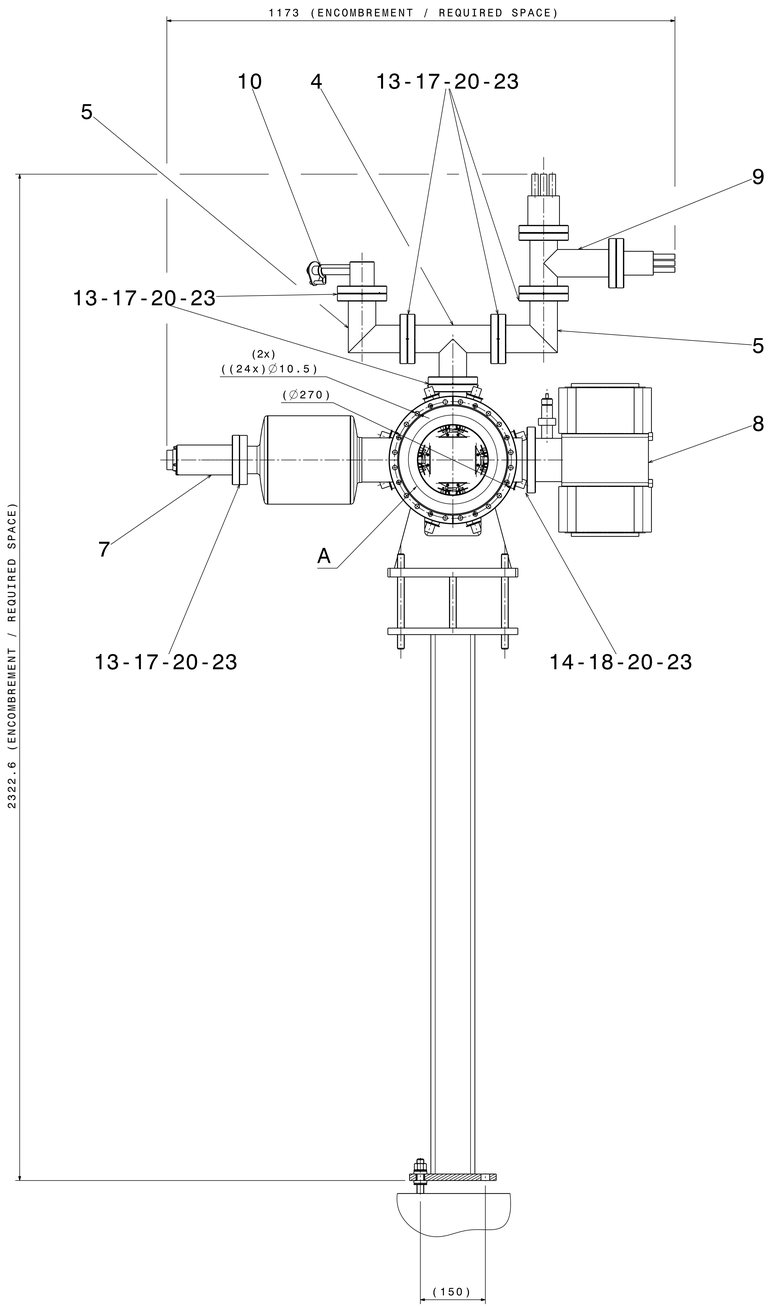

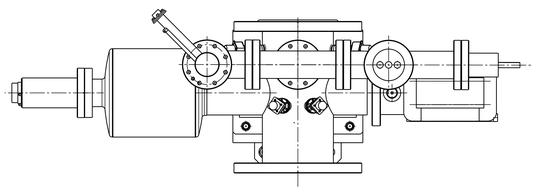

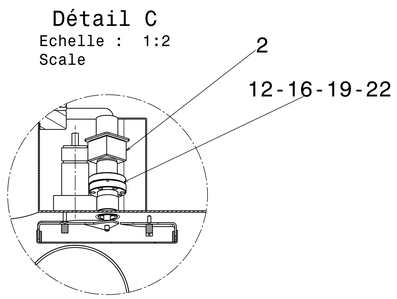

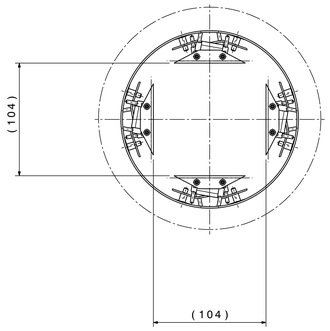

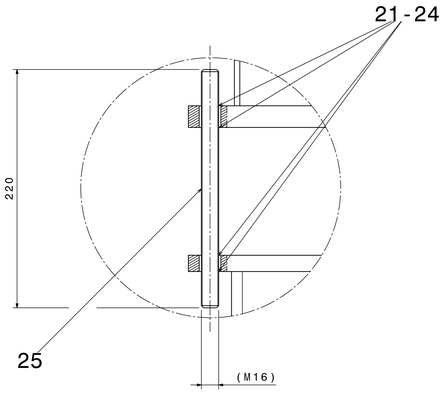

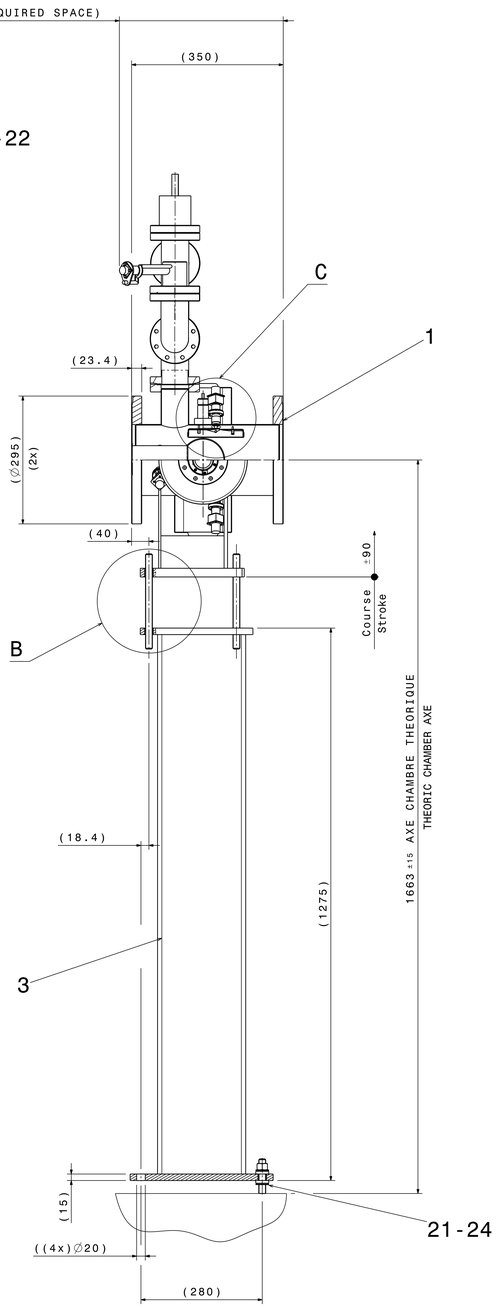

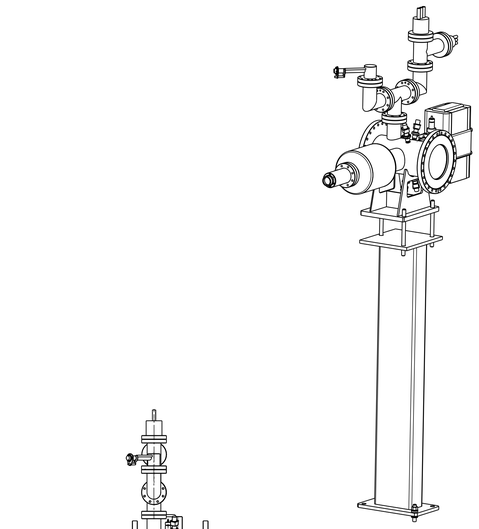

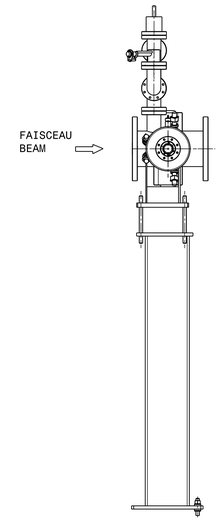

Torque Screw A4-70 for general mechanical assembly Serrage pour du A4-70 a sec (coeff. frottement μ=0.2)									
Thread	M3	M4	M5	M6	M8	M10	M12	M14	M16
Couple de serrage Tightening torque Nm	1.1	2.6	5.1	8.8	21.4	44	74	119	183

QUANT	DESCRIPTION	POS	MAT.	OBSERVATIONS	REF.CERN
3	THREADED ROD M16 TIGE FILETEE M16	25	STEEL ACIER	LENGTH 220mm LONGUEUR 220mm	47.36.77 160.3
20	SPHERICAL WASHER M16 RONDELLE SPHERIQUE M16	24	HARD. STEEL ACIER DUR		47.78.12 816.6
128	PLAIN WASHER M8 RONDELLE PLATE M8	23	ST. STEEL A4 AC. INOX A4		47.78.15 116.5
96	PLAIN WASHER M4 RONDELLE PLATE M4	22	ST. STEEL A4 AC. INOX A4		47.78.15 108.5
20	HEXAGONAL NUT M16 ECROU HEXAGONAL M16	21	ST. STEEL AC. INOX		47.43.77 160.4
64	HEXAGON NUT M8 ECROU HEXAGONAL M8	20	ST. STEEL A4 AC. INOX A4		47.43.78 108.4
48	HEXAGONAL NUTS M4 ECROU HEXAGONAL M4	19	ST. STEEL A4 AC. INOX A4		47.43.78 104.8
16	HEXAGONAL HEAD SCREW M8x55 VIS A TETE HEXAGONALE M8x55	18	ST. STEEL A4 AC. INOX A4		47.62.83 122.3
48	HEXAGONAL HEAD SCREW M8x45 VIS A TETE HEXAGONALE M8x45	17	ST. STEEL A4 AC. INOX A4		47.62.83 118.9
48	HEXAGONAL HEAD SCREW M4x20 VIS A TETE HEXAGONALE M4x20	16	ST. STEEL A4 AC. INOX A4		47.62.83 004.8
		15			
1	SEAL METAL FOR UHV FLANGE DN 100 JOINT METAL POUR BRIDE UHV DN100	14	CuOFS 0,1 AG CuOFS 0,1 AG		18.60.55 860.4
6	SEAL METAL FOR UHV FLANGE DN 63 JOINT METAL POUR BRIDE UHV DN 63	13	CuOFS 0,1 AG CuOFS 0,1 AG		18.60.55 855.1
8	SEAL METAL FOR UHV FLANGE DN 16 JOINT METAL, POUR BRIDE UHV DN 16	12	CuOFS 0,1 AG CuOFS 0,1 AG		18.60.55 840.8
		11			
1	IONISATION GAUGE (VGI) JAUGE DE IONISATION (VGI)	10		SVT 305	
1	RESIDUAL GAZ ANALYSER (RGA) ANALYSEUR DE GAZ RESIDUEL (RGA)	9		BALZER QMA125	
1	ION PUMP (VPI60) POMPE IONIQUE 60 l/s (VPI60)	8		VARIAN 911.5034	
1	SUBLIMATION PUMP (VPS) POMPE DE SUBLIMATION (VPS)	7		PS_VMPUM0001	
		6			
2	VACUUM TUBE 90° TUBE A VIDE 90°	5		CVT.FE.114.64	
1	VACUUM TUBE TUBE A VIDE	4		CVT.FT.114.64R	
1	PILLAR VACUUM CHAMBER PILIER CHAMBRE A VIDE	3		E76.1050	
4	ELECTRODE EQUIPPED ELECTRODE EQUIPEE	2		LEIBPUAI0001	
1	PUMP TANK WITH PICK UP CHAMBRE A VIDE AVEC PIQUAGES	1		LEIVCKSC0001	
	ENS/ASS		S.ENS/S.ASS		

Assembly of Kicker magnet - for damping or Q-measurement

KICKER
ASSEMBLY
KICKER
ENSEMBLE

ECHELLE SCALE	DES/DRA.	ACROTECNA	2006-08-04
1:5 1:2	CONTROLLED		
	RELEASED		
	APPROVED		

LEI\LMKDQ0\LEILMKDQ0003

REMPLACE/REPLACES

NON VALABLE POUR EXECUTION
NOT VALID FOR EXECUTION

QAC -

LEILMKDQ0003 SIZE 0 IND.

DESSIN, RUGOSITE, TOLERANCES
DRAWING, ROUGHNESS, TOLERANCES
DAMMIN, RAUHEITE, TOLERANZEN
ACCORDING TO ISO STANDARDS

PROJECTION

ORGANISATION INTERNATIONALE POUR
LA RECHERCHE NUCLEAIRE
CERN
CH-1211 GENEVE 23 - SUISSE
CERN
CH-1211 GENEVA 23 - SWITZERLAND
CE DOCUMENT EST LA PROPRIETE DU CERN. IL NE PEUT ETRE REPRODUIT OU COMMUNIQUE A DES TIERS SANS AUTORISATION ECRITE.
THIS DOCUMENT IS THE PROPERTY OF CERN. IT MAY NOT BE REPRODUCED OR DISCLOSED WITHOUT WRITTEN AUTHORISATION.