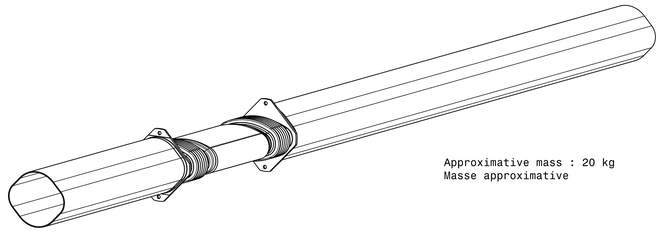

Approximative mass : 20 kg
Masse approximative

B-B

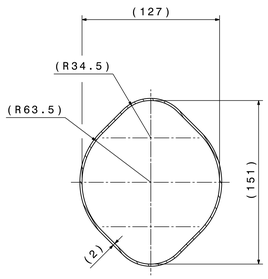

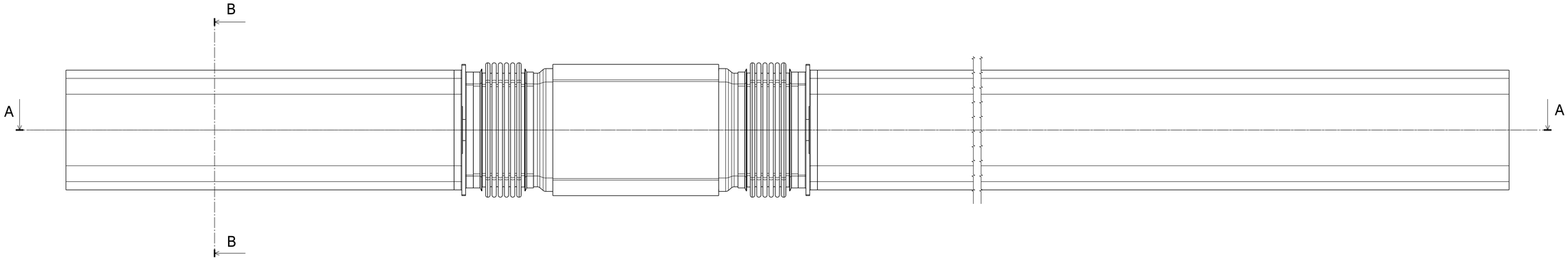

A-A

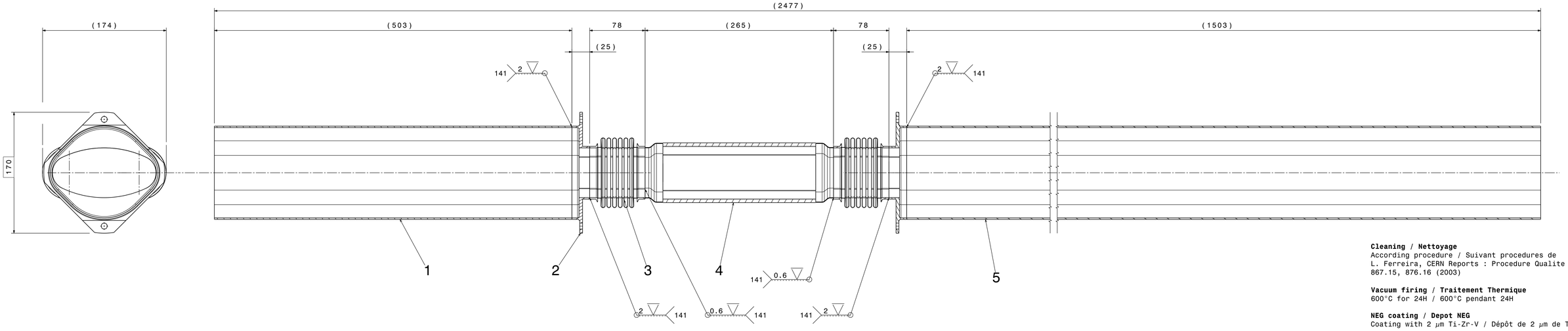

Cleaning / Nettoyage
According procedure / Suivant procedures de
L. Ferreira, CERN Reports : Procedure Qualite 867.11, 867.15, 876.16 (2003)

Vacuum firing / Traitement Thermique
600°C for 24H / 600°C pendant 24H

NEG coating / Depot NEG
Coating with 2 μm Ti-Zr-V / Dépôt de 2 μm de Ti-Zr-V

Note / Nota :
Protect the ceramic during the removal of the NEG
Protéger la céramique lors de la dépose du NEG

Information
Inscribe drawing number on shades area
with an electrical pen
Inscrire le numero de detail sur une zone predefini
avec un stylo electrique

TOLERANCES GENERALES MOYENNE	Tolerances geometriques, lineaires et angulaires	ISO 2768-mK-E
	Aretes de forme non definies	ISO 13715 L-0.3 L-0.3

This drawing represents a part (or a component) of the vacuum system for LEIR with will operate at 10-10 Pa (10-12Torr).All welds must be made using the specified technics with 100% penetration.Welds and all other surfaces must not be finished by grinding or any other mechanical abrasion.Any part (or component) of the vacuum system showing a room temperature leak rate (localized or global),when measured with a calibrated UHV leak detector, in excess of 1x10-11 Pa m3 s-1 (7.5x10-11 Torr ls-1) will be considered as unacceptable.

Ce dessin represente une partie (ou composant) du systeme a vide LEIR qui fonctionnera a 10-10 Pa (10-12 Torr). Toutes les soudures seront realisees selon le procede specifique avec penetration de 100%.Ces soudures ne doivent etre ni meulees ni abrasees. Toute partie (ou composant) du systeme a vide ayant un taux de fuite (local ou global), qui est mesure a l'aide d'un detecteur de fuite UHV, superieur a 1x10-11 Pa m3 s-1 (7.5x10-11 Torr ls-1) sera considere comme inacceptable.

QUANT	DESCRIPTION	POS	MAT.	OBSERVATIONS	REF.CERN
1	LARGE VACUUM CHAMBER GRANDE CHAMBRE A VIDE	5	ST. STEEL 316LN	LEIVCQLG0003	
1	CERAMIC CERAMIQUE	4		E43.1504	
4	ELLIPTIC BELLOWS SOUFFLET ELLIPTIQUE	3	ST. STEEL 316L/316LN	PSP.00394.2	
2	TRANSITION PART PIECE DE TRANSITION	2	ST. STEEL 316LN	LEIVCQLB0005	
1	SMALL VACUUM CHAMBER PETITE CHAMBRE A VIDE	1	ST. STEEL 316LN	LEIVCQLB0004	

ENS/ASS	LEILMQFB0002	S.ENS/S.ASS	LEIVCQLG0001

LEIR Vacuum Chamber for Quadrupole Lozenge shape (Variant 5)

VACUUM CHAMBER ASSEMBLY
VACUUM CHAMBER
ENSEMBLE CHAMBRE A VIDE
CHAMBRE A VIDE

ECHELLE SCALE 1:2	DES/DRA.	ACROTECNA	2006-07-10
	CONTROLLED		
	RELEASED		
	APPROVED		

LEI\VCQLGO\LEIVCQLG0002

REMPLACE/REPLACES

NON VALABLE POUR EXECUTION
NOT VALID FOR EXECUTION

QAC - | LEIVCQLG0002 | SIZE 0 | IND.

DESSIN, RUGOSITE, TOLERANCES ACCORDING TO ISO 8015
DRAWING, RUGOSITY, TOLERANCES ACCORDING TO ISO 8015

PROJECTION

ORGANISATION EUROPEENNE POUR LA RECHERCHE NUCLEAIRE
EUROPEAN ORGANIZATION FOR NUCLEAR RESEARCH
CONSEIL EUROPEEN POUR LA RECHERCHE NUCLEAIRE
GENEVE
SUISSE
CERN
LA REPRODUCTION, MEME PARTIELLE, DE CE DOCUMENT, L'EMPLOI DE SON CONTENU OU LA MISE EN OEUVRE DE CELUI-CI SONT INTERDITES SAUF AUTORISATION ECRITE
THE REPRODUCTION, EVEN PARTIAL, OF THIS DOCUMENT, THE USE OF ITS CONTENTS OR THE DISCLOSURE TO THIRD PARTIES IS PROHIBITED UNLESS WRITTEN AUTHORISATION